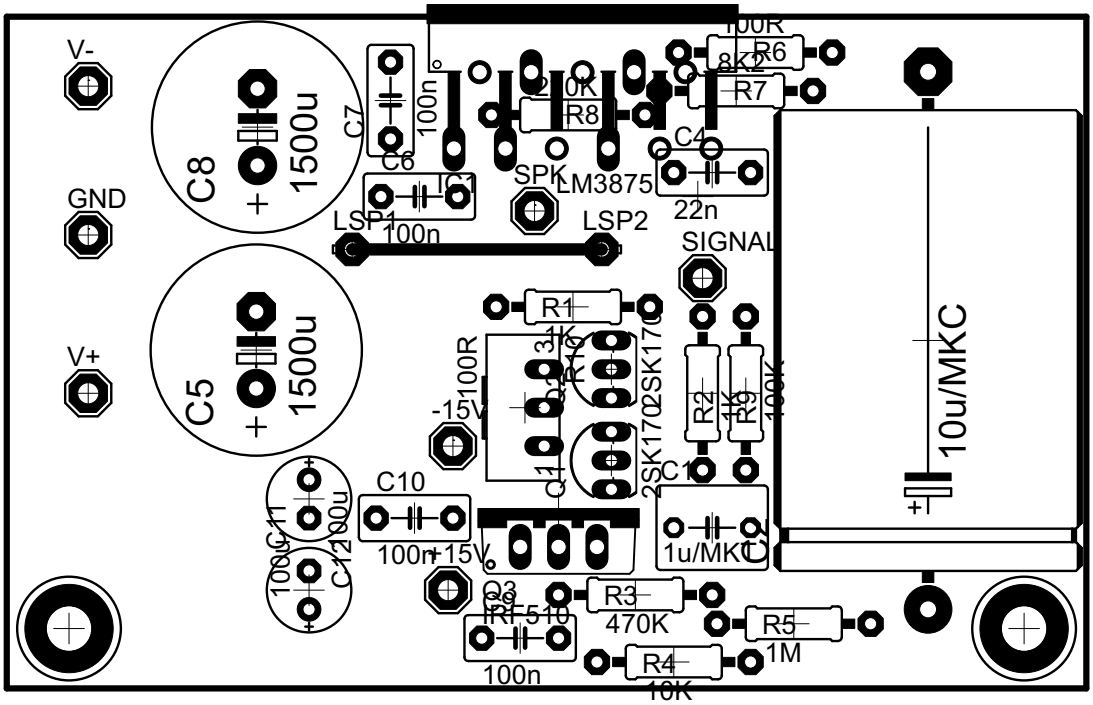
V-
GND
V+
C8
1500u
C5
1500u
C7
100n
C6
100n
IC1
LSP1
LSP2
SPK
LM3875
210K
R8
100R
R6
8K2
R7
C4
22n
SIGNAL
R1
1K
2SK170
R2
1K
R9
100K
C1
1u/MKC
10u/MKC
-15V
100R
C10
100n
+15V
C11
100u
C12
100u
Q3
IRF510
R3
470K
R5
1M
R4
10K
100n